Godox

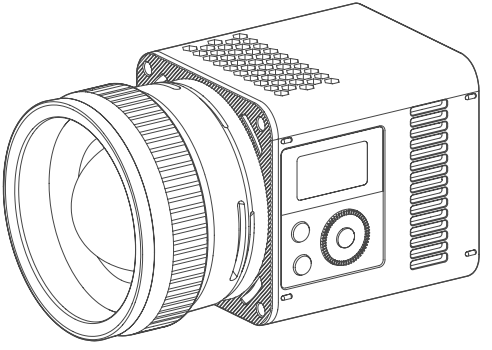

ML150Bi

神牛双色温 LED 摄影灯

Godox Bi color LED Video Light

使用手册

Instruction Manual

V1.0 说明书/Instruction Manual V1.00 固件/Firmware

重要的安全说明及注意事项

首先作为最基本原则：本产品为专业灯光布景设备，应由专业灯光师使用或在专业人士指导下使用。使用时必须始终遵循基本的安全预防措施，具体安全预防措施如下：

1. 使用前必须阅读并理解产品说明书。

2. 专业灯具，禁止儿童使用。当儿童靠近时，家长或陪护人必须密切监督，以免儿童因碰撞灯具或私用灯具造成人身伤害。

3. 本灯具并非普通照明灯具，不可用于普通照明，任何有过眼部损伤或眼部敏感的人群均应避免使用本灯具。

4. 灯具点亮时，必须小心使用，禁止接触高温部件，如 LED 灯珠，以免造成灼伤。

5. 倘若灯珠损坏或因热变形，应停止使用，并及时联系制造商、服务代理商或合格的维修人员更换灯珠，以免发生意外。

6. 请勿使用损坏的设备或设备配件，待专业维修人员检查维修，确认设备正常方可使用。

7. 在使用过程中，如果本产品由于跌落、受到挤压或遭受强烈冲击而造成外壳破裂的，请勿继续使用，以免因接触到内部电子元件而受到电击伤害。

8. 请勿私自拆卸产品，如产品出现故障，须由本公司或授权的维修人员进行检查维修。

9. 存放本设备之前，请确保设备已完全冷却。存放时，将电源线从设备上拔出。设备应放置于设备便携包内或通风干燥处。

10. 请勿将设备放置在酒精、汽油等易燃易挥发的溶剂附近。

11. 本厂不推荐的产品附件，请勿使用，以免导致火灾、触电或人身伤害。

12. 清洁本设备时，请勿用湿布擦拭，请用干布，软布擦拭设备污垢。

13. 本设备没有防水性能，请让设备保持干燥，请勿将本设备浸入水中或其他液体中。设备需安装在干燥且通风处，避免在雨天、潮湿、多尘或过热环境下使用。请勿将任何物体置于灯具上或使液体流入灯具内部，以免发生意外。

14. 一经发现，擅自检修设备，将取消一年保修期，维修需要收取相关费用。

15. 安全说明依据本厂严格测试制定，设备设计和规格如有变更，恕不另行通知。客户可以上神牛官网查看最新的电子版说明，了解产品最新资讯。

⚠ 警告

1. 如果电池更换不当会有爆炸危险，只能用同样类型或等效类型的电池来更换，仅维修人员可更换，非一般人员更换。请勿拆卸产品或拆解电池。

2. 电池不得暴露在诸如日照，火烤或类似过热环境中，产品不得淋雨、进水。

3. 消费者若使用电源适配器充电 , 则应购买配套使用获得 CCC 认证并满足标准要求的电源适配器。

4. 电池禁止拆解、撞击、挤压或投入火中。若出现严重鼓胀 , 请勿继续使用。请勿置于高温环境中。浸水后禁止使用。

5. 使用时 , 应放置在易散热的地方 , 不要放置在床头、被褥上、包裹里或其他不易散热的环境中使用，避免婴幼儿接触玩耍，儿童请在成人指导下使用。

请勿直视光源

本设备包含型号核准代码为 : CMIIT ID: 24J44V807298，为该产品的无线电发射模块。

部件名称

灯体

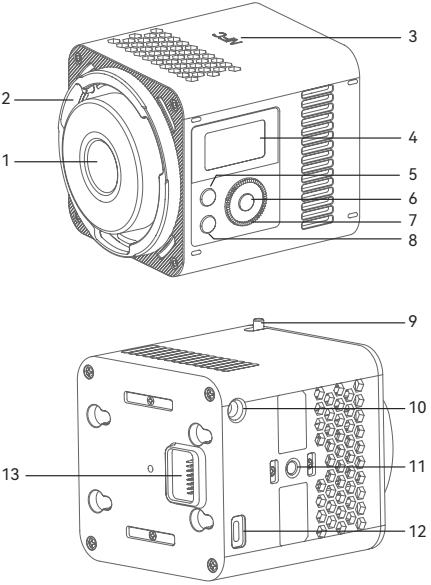

1. 灯珠
2. 神牛卡口
3. NFC 感应区
4. 彩屏
5. 菜单 / 开关按键
6. SET 按键
7. 调节拨盘
8. MODE 按键
9. 卡口推制
10. DC 输入接口
11. 1/4" 螺丝孔
12. 有线 DMX 接口
13. 安装公座（接转接板或电池）

V 口电池转接板 ML-VMA

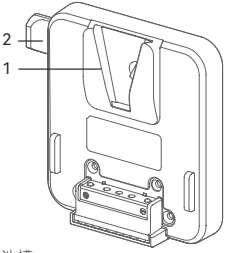

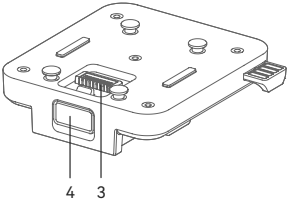

1. V 口电池槽
2. 拆卸推制①
3. 安装母座（接灯体）
4. 拆卸推制②

电池 ML-BA (另购)

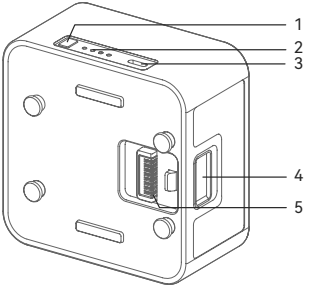

1. 电量显示键（短按）
2. 电量显示灯
3. USB-C 充电口
4. 拆卸推制
5. 安装母座（接灯体）

物品清单

灯体 × 1

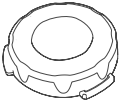

灯头保护罩 × 1

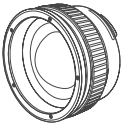

变焦透镜反光杯
ML-Z × 1

支架 AD-E2 × 1

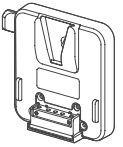

V 口电池转接板 ML-VMA × 1

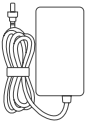

适配器 × 1

电源线 × 1

收纳包 × 1

说明书 × 1

另购物品

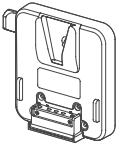

V 口电池转接板 ML-VMA

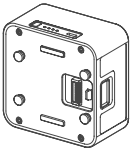

电池 ML-BA

DMX 转接线 DMX-C2

温馨提示：说明书中线图均为示意图，仅供参考。由于产品不断更新与升级，产品实物与线图可能存在差异，请以实物为准。

安装与拆卸

保护罩 / 变焦透镜反光杯

1. 将保护罩或变焦透镜反光杯对准灯头卡口插入，顺时针旋转安装。

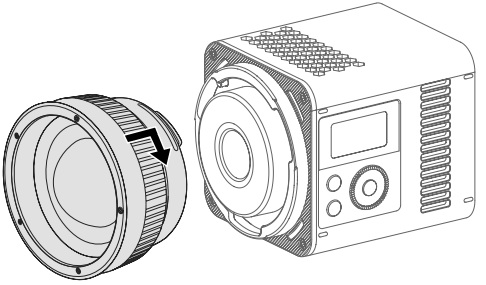

2. 如需拆卸，按住卡口推制的同时逆时针旋转保护罩或变焦透镜反光杯。

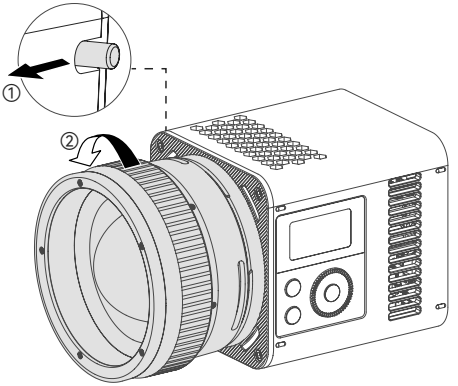

注:
1. 示意图以变焦透镜反光杯为例。
2. 灯珠点亮前请将保护罩取下。

适配器

将电源线与适配器接好，如图一头插入灯体 DC 输入接口并旋转锁环进行锁紧，另一头接入电源即可。

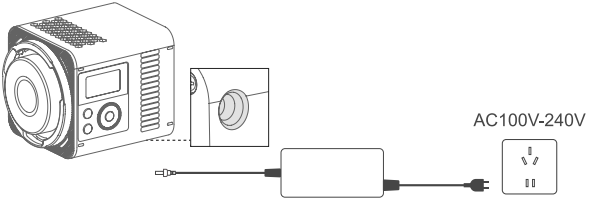

V 口电池转接板 ML-VMA

1. 安装母座与灯体上的安装公座对准后推动转接板，拆卸推制②自动锁紧。

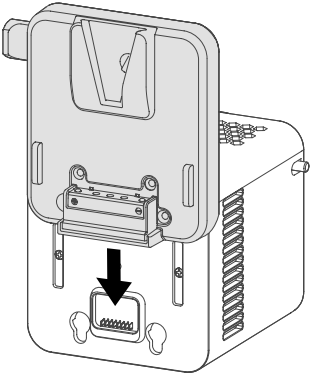

2. 另购一节 14.8V 或 26V 的 V 口电池，插入 V 口电池槽。

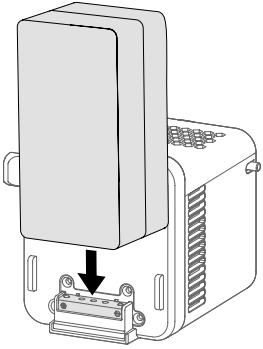

3. 如需拆卸，按住拆卸推制①的同时取出 V 口电池；按住拆卸推制②的同时反向推动转接板即可。

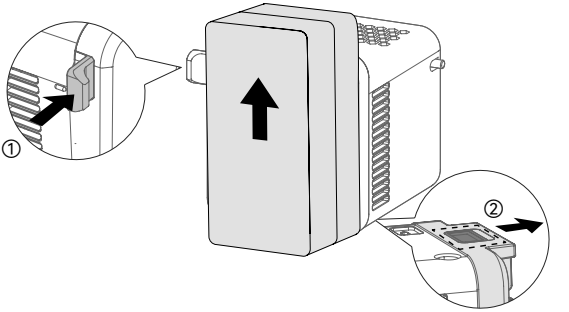

电池 ML-BA（另购）

1. 安装母座与灯体上的安装公座对准后推动电池，拆卸推制自动锁紧。

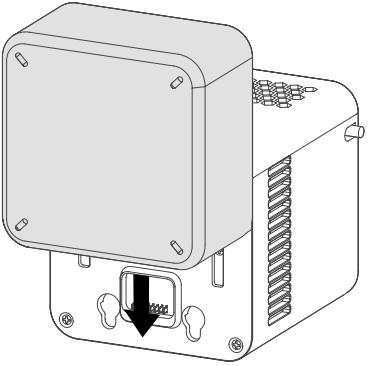

注：使用 ML-BA 电池供电，灯具最大输出功率约 100W。

2. 如需拆卸，按住拆卸推制的同时反向推动电池即可。

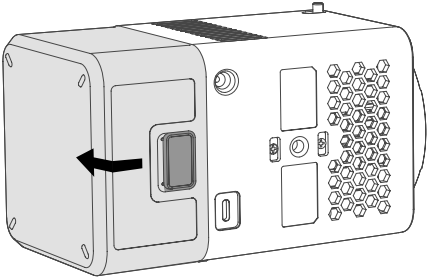

有线 DMX 连接

另购 DMX 转接线 DMX-C2，插入灯体有线 DMX 接口，灯具即具备 DMX 输出口和输入口，再使用 DMX 连接线连接控制台并串联灯具，进行有线 DMX 连接。

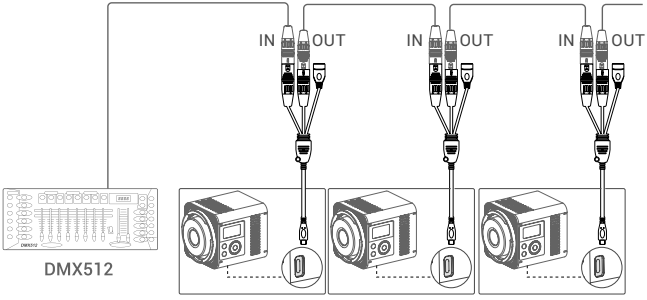

注：DMX 转接线 DMX-C2、DMX 控制台、DMX 连接线皆为另购物品。

开机 / 关机

接通电源，长按开关按键后旋转调节拨盘实现开机，再次长按实现关机；可在菜单中设置防误触，调整开机方式。

CCT 模式

短按 MODE 按键，出现 CCT 设置界面，通过短按 SET 并旋转调节拨盘设置参数值，顺时针旋转递增参数值，逆时针旋转递减参数值。

亮度范围：0% ~ 100%
色温范围：2800K ~ 6500K

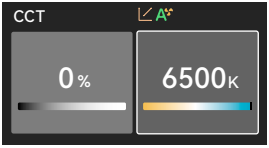

FX 模式

短按 MODE 按键，出现 FX 设置界面，通过旋转调节拨盘可选 11 类光效，短按 SET 进入某一类光效的具体设置。

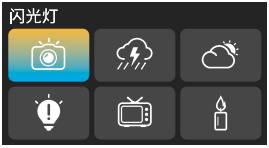

光效	亮度	色温	速度	其他
闪光灯	0% -100%	2800K-6500K	1-100	模式：闪光灯 / 镁光灯 触发：自动 / 手动
雷闪电		2800K-6500K	×	闪烁次数：随机 /1-10 频率：随机 /2-20 触发：自动 / 手动
多云		×	随机 /1-100	亮暗比例：30%-90%
坏灯泡		2800K-6500K	1-100	×
电视机		×	1-100	×
蜡烛		×	1-100	×
火		×	1-100	×
烟花		×	1-100	余烬：1-100
爆炸		2800K-6500K	1-100	余烬：1-100 触发：自动 / 手动
焊接		2800K-6500K	1-100	×
SOS		2800K-6500K	×	×

注：根据需求旋转调节拨盘设置当前参数值，设置完毕后短按 SET 并旋转调节拨盘可跳入下一栏参数进行设置；选中手动时，通过短按一次 SET 触发一次该光效；某个光效设置完毕后短按 MODE 按键返回上一级。

菜单设置

短按菜单按键进入菜单界面，旋转调节拨盘进行选择，短按 SET 进入该项的设置，设置完毕短按菜单按键返回上一级。

DMX

短按 SET 进入 DMX，通过短按 SET 并旋转调节拨盘设置参数值，如下表所示。

一级选项	二级选项	说明
地址	001-512	起始地址
DMX模式	01: CCT 8 Bit	8位CCT模式
	02: FX 8 Bit	8位FX模式
	03: CCT 16 Bit	16位CCT模式
	04: FX 16 Bit	16位FX模式
	05: ULTIMATE 8 Bit	8位ULTIMATE模式
	06: ULTIMATE 16 Bit	16位ULTIMATE模式
RDM状态	开启	开启RDM，开启后控制台可设置灯具地址及DMX模式
	关闭	关闭RDM
DMX丢失状态	保持最后状态	失去DMX控制信号后，在关机或再次接收有效DMX控制信号前， 持续使用最后一次接收的DMX控制信号。
	直接关闭	灯具直接熄灭
	保持最后状态2分钟熄灭	失去DMX控制信号后，持续使用最后一次接收的DMX控制信号2 分钟，2分钟后灯具熄灭。注：如2分钟内接收到有效DMX控制信号，则使用新的DMX控制信号。
终止开关	开启	开启DMX终端
	关闭	关闭DMX终端
增强通道	开启	开启增强通道信号
	关闭	关闭增强通道信号
二维码	(扫描二维码查看DMX模式表)	

注：使用 DMX/RDM 控制台控制灯具，可登录官网 https://www.godox.com.cn/ 下载 DMX 模式表。

蓝牙

短按 SET 进入蓝牙，通过短按 SET 并旋转调节拨盘设置开启或关闭；如需蓝牙复位，旋转调节拨盘到复位栏，短按 SET 即可；下方查看蓝牙 MAC 码，方便查找灯具。

“Godox Light”app 下载

扫描二维码即可下载“Godox Light”手机 app（安卓和苹果系统都可以使用）。

注：
1. 首个移动设备（手机或平板电脑）可直接使用 app 操控灯体。更换其他移动设备时，灯体需进行蓝牙重置方可正常使用 app。
2. app 需升级至 V3.0 以上版本。

调光曲线

短按 SET 进入调光曲线，通过旋转调节拨盘可选线性 / S 曲线 / 指数 / 对数，选定后短按 SET 完成设置。

防误触

短按 SET 进入防误触，通过旋转调节拨盘选择开机方式，选定后短按 SET 完成设置。

关闭：接通电源，长按开关按键进入主界面。
开启：接通电源，长按开关按键后旋转调节拨盘进入主界面。
通电开机：DC 输入接口接通电源后即进入主界面。

屏幕设置

短按 SET 进入屏幕设置，通过短按 SET 并旋转调节拨盘设置屏幕亮度值，逆时针旋转递减亮度，顺时针旋转递增亮度，范围：10%-100%。

风扇

短按 SET 进入风扇，通过旋转调节拨盘可选静音 / 自动 / 中速 / 高速，选定后短按 SET 完成设置。

语言

短按 SET 进入语言，通过旋转调节拨盘可选简体中文 /English，选定后短按 SET 完成设置。

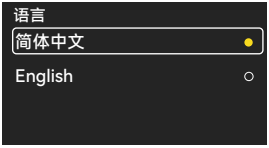

版本与升级

短按 SET 进入版本与升级，此界面可查看升级提示。

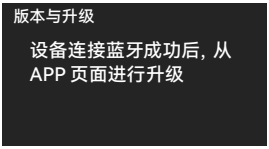

“Godox Light”app 固件升级

手机中打开 Godox Light，进入其中一个场景，点击 +（添加设备），设备添加完成后，点击 ⋮ 延伸出多项设置，再选择固件升级即可。

恢复出厂设置

短按 SET 进入恢复出厂设置，通过旋转调节拨盘可选确定 / 取消；短按 SET 确定恢复出厂，灯具自动重启后按提示旋转调节拨盘，设置需要的语言后灯体亮度值自动变为 50%。

灯具信息

短按 SET 进入灯具信息，此界面可查看当前灯具的基础信息。

NFC 加灯

1. 开启手机与灯具的蓝牙功能，确保“Godox Light”app 版本在 V3.2.4 以上。
2. 打开 app 进入对应场景，点击 + 选择“NFC 加灯”，手机靠近灯具 NFC 感应区即可完成加灯。

照度数据

色温	测试条件	照度单位	1m	2m	3m
2800K	裸灯	lux	3510	900	400
		fc	326	84	37
	搭配变焦透镜反光杯 ML-Z（聚光）	lux	37400	8800	3800
		fc	3470	818	353
	搭配变焦透镜反光杯 ML-Z（泛光）	lux	26300	7360	3330
		fc	2440	683	309
3200K	裸灯	lux	3720	954	424
		fc	346	89	39
	搭配变焦透镜反光杯 ML-Z（聚光）	lux	39700	9340	4040
		fc	3690	867	375
	搭配变焦透镜反光杯 ML-Z（泛光）	lux	27900	7820	3530
		fc	2590	727	328
4300K	裸灯	lux	3960	1020	451
		fc	368	94	42
	搭配变焦透镜反光杯 ML-Z（聚光）	lux	42400	9980	4330
		fc	3940	927	402
	搭配变焦透镜反光杯 ML-Z（泛光）	lux	29900	8360	3770
		fc	2770	777	350
5600K	裸灯	lux	4360	1120	496
		fc	405	104	46
	搭配变焦透镜反光杯 ML-Z（聚光）	lux	46800	11100	4780
		fc	4350	1030	444
	搭配变焦透镜反光杯 ML-Z（泛光）	lux	32900	9220	4150
		fc	3060	857	386
6500K	裸灯	lux	4540	1170	518
		fc	422	108	48
	搭配变焦透镜反光杯 ML-Z（聚光）	lux	48900	11500	5010
		fc	4540	1070	466
	搭配变焦透镜反光杯 ML-Z（泛光）	lux	34400	9620	4330
		fc	3190	894	403

以上数据均为平均值，非绝对值，以上测试皆在灯体 100％亮度下进行。

规格参数

型号	ML150Bi
DC 输入接口	36V⎓ 4.6A , 165W (Max.)
调光范围	0% ~ 100%
色温范围	2800K ~ 6500K
调光曲线	线性 / S 曲线 / 指数 / 对数
FX 光效	11 类
CRI	≈ 96
TLCI	≈ 96
控制方式	有线 DMX/RDM，蓝牙，灯体控制
蓝牙控制距离	30m
工作环境温度	-10℃ ~ 40℃
裸灯尺寸	≈ 91mm*115mm*91mm
裸灯净重	≈ 770g

规格和参数如有变更，恕不另行通知。

Important Safety Instructions and Precautions

First of all, as the most basic principle: This product is a professional lighting set equipment and should be used by professional lighting engineers or under the guidance of professionals. Basic safety attentions must always be followed during use, as follows:

1. Before use, please read and understand the instruction manual.

2. Professional lighting is prohibited for children. When children are near, parents or accompanying persons must supervise closely to prevent children from personal injury due to collision with lamps or private use of lamps.

3. This lighting product is not ordinary lighting product and cannot be used for general lighting. Anyone who has suffered eye damage or has sensitive eyes should avoid using this product.

4. When the lamp is on, it must be used with care. Do not touch high-temperature parts, such as LED lamp beads, to avoid burns.

5. If the lamp bead is damaged or deformed by heat, stop using this equipment, and contact the manufacturer, service agent or qualified maintenance personnel to replace the lamp bead in time to avoid accidents.

6. Do not use damaged equipment or accessories, and wait for professional maintenance personnel to check and repair to confirm being normal before use.

7. During using, if the casing of this product is broken due to being dropped, squeezed or subjected to strong impact, please do not use it, so as to avoid electric shock injury due to contact with internal electronic components.

8. Do not disassemble the product without permission. If the product fails, it must be checked and repaired by authorized maintenance personnel.

9. Before storing, make sure that the equipment has cooled down completely. For storage, unplug the power cord from the equipment. The equipment should be placed in the carrying case or in a ventilated dry place.

10. Do not place equipment near flammable and volatile solvents such as alcohol and gasoline.

11. Do not use accessories that are not recommended by our factory to avoid fire, electric shock or personal injury.

12. When cleaning the device, please do not use a wet cloth to wipe, please use a dry, soft cloth to wipe the dirt on the device.

13. This equipment is not waterproof, please keep it dry and do not immerse it in water or other liquids. The equipment should be installed in a dry and ventilated place, and avoid using it in rainy, humid, dusty or overheated environments. Do not place any objects on the lamp or let liquid flow into the lamp to avoid accidents.

14. If it is found that the equipment is repaired without authorization, the one-year warranty period will be cancelled and relevant fees will be charged for maintenance.

15. The safety instructions are formulated according to the strict testing of the factory, and the design and specifications of the equipment are subject to change without prior notice. For latest product information, please check the GODOX website and view latest electronic instruction.

⚠ Warning

1. Danger of explosion if the battery are not replaced properly, danger of fire or explosion if replaced with the wrong type of battery pack, replace only with battery of the same type or equivalent. Replace by service personnel only, not general personnel. Do not disassemble the product or disassemble the battery.

2. The battery must not be exposed to conditions such as sunlight, fire, or similar excessive heat. Do not expose to rain or water.

3. The Battery is not allowed to be disassembled, hit, crushed or thrown into fire. Do not continue to use if it is seriously inflated. Do not place in a high temperature environment. Do not use after immersion in water.

4. When using, it should be placed in a place where it is easy to dissipate heat, and should not be placed on the bedside, bedding, in a package or other environments that are not easy to dissipate heat. Keep out of contact with infants and young children, and children should use under adult guidance.

Do not stare at the operating light source.

Names of Parts

Light Body

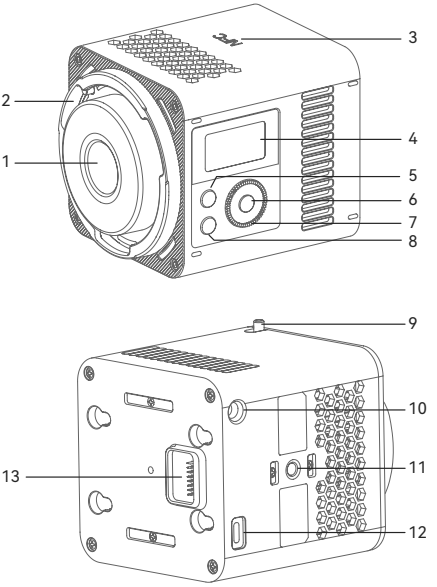

1. Light Beads
2. Godox Mount
3. NFC Sensing Area
4. Color Screen
5. MENU/Power Switch Button
6. SET Button
7. Select Dial
8. MODE Button
9. Mount Locking Pusher
10. DC Input Port
11. 1/4" Screw Port
12. Wired DMX Port
13. Male Socket (Connect to adapter plate or battery)

V-Mount Battery Adapter Plate ML-VMA

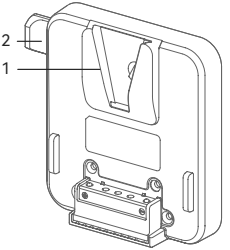

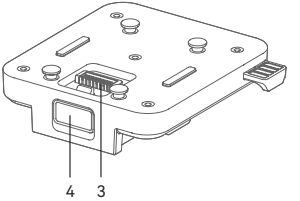

1. V-Mount Battery Slot
2. Detaching Pusher ①
3. Female Socket (Connect to light body)
4. Detaching Pusher ②

Battery ML-BA (Sold Separately)

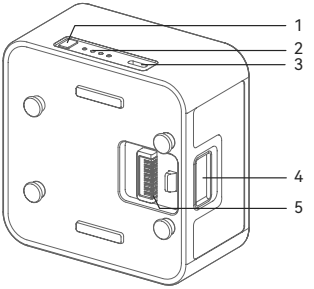

1. Battery Level Button (Press)
2. Battery Level Indicator
3. USB-C Charging Port
4. Detaching Pusher
5. Female Socket (Connect to light body)

What's Inside

Light Body × 1

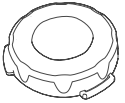

Protective Cover × 1

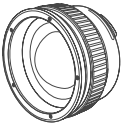

Zoom Lens Reflector ML-Z × 1

Holder AD-E2 × 1

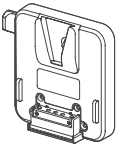

V-Mount Battery Adapter Plate ML-VMA × 1

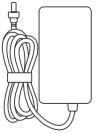

Adapter × 1

Power Cord× 1

Storage Bag × 1

Instruction Manual × 1

Separately Sold Accessories

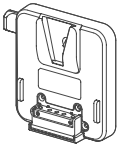

V-Mount Battery Adapter Plate ML-VMA

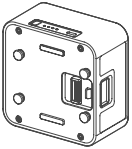

Battery ML-BA

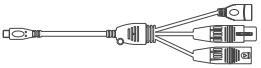

DMX Adapter Cable DMX-C2

Note: Due to continuous updates and upgrades of the products, there may be differences between the actual products and the pictures. Therefore, the pictures are for reference only, products to prevail in kind.

Installation and Disassembly

Protective Cover/Zoom Lens Reflector

1. Align the protective cover or zoom lens reflector with the mount and insert in, then rotate clockwise to install.

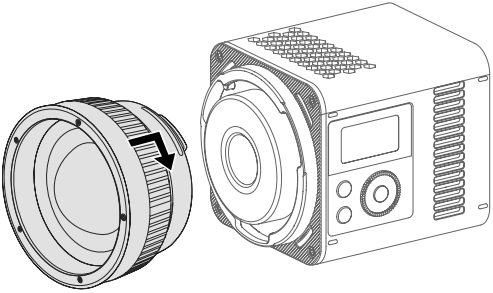

2. Press and hold the mount locking pusher and rotate counterclockwise to remove the protective cover or zoom lens reflector.

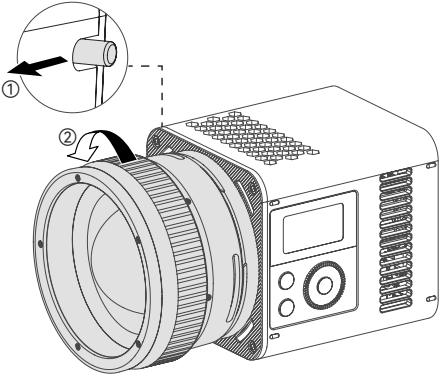

Note:
1. The pictures take zoom lens reflector as an example.
2. Please take off the protective cover before turning on the light.

Adapter

Connect the adapter to the power cord, then insert into the DC input port on the light body (rotate the locking ring to lock) and the power source respectively.

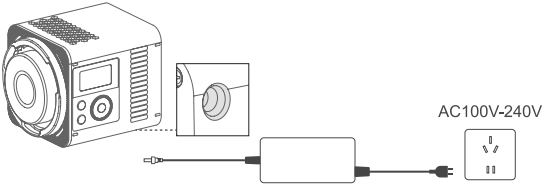

V-Mount Battery Adapter Plate ML-VMA

1. Align the female socket on the plate with the male socket on the light body and push the plate, the detaching pusher ② will automatically lock up.

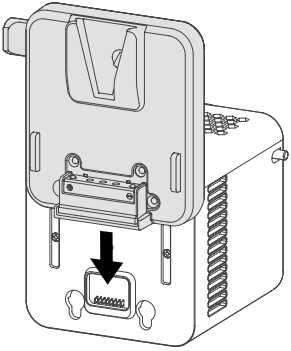

2. Insert a separately purchased V-mount battery (14.8V or 26V) into the V-mount battery slot.

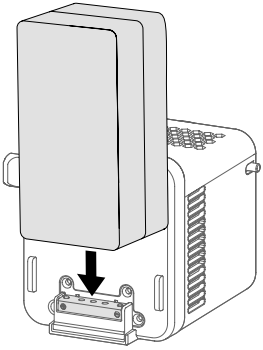

3. Press and hold the detaching pusher ① can remove the V-mount battery, press and hold the detaching pusher ② while pushing the plate reversely can remove the plate.

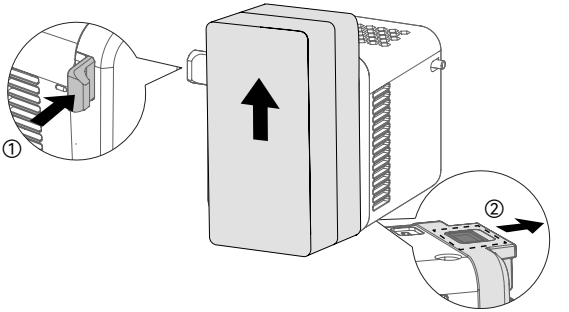

Battery ML-BA (Sold Separately)

1. Align the female socket on the battery with the male socket on the light body and push the battery, the detaching pusher will automatically lock up.

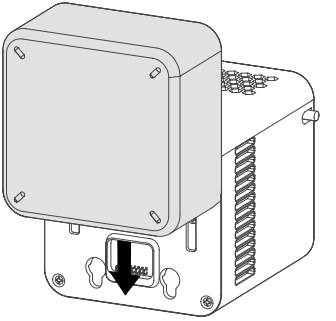

Note: The max.output power is approx. 100W when using battery ML-BA.

2. Press and hold the detaching pusher while pushing the battery reversely can remove the plate.

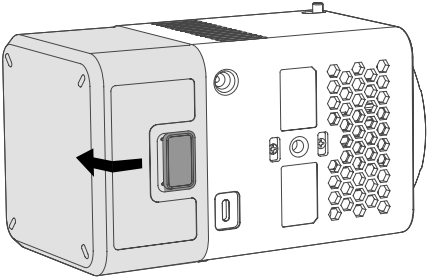

Wired DMX Connection

After inserting a separately purchased DMX adapter cable DMX-C2 into the wired DMX port, the fixture is equipped with DMX output and input ports, wired DMX connection can be realized by connecting the separately purchased DMX cable to the controller and fixture.

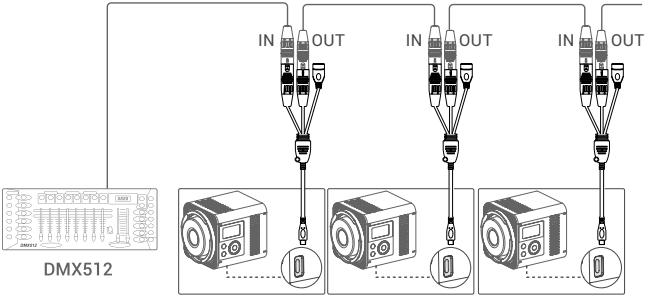

Note: The DMX adapter cable DMX-C2, DMX controller, and DMX cable are sold separately.

Power Switch

After connecting to the power source, press and hold the power switch button then rotate the select dial to turn the device on, press and hold again to turn it off. The bootup mode is available for adjustment in anti-false touch setting.

CCT Mode

Press the MODE button to enter mode selection, rotate the select dial and press the SET button to enter CCT mode, in which you can adjust the DIM/CCT/GM.

DIM range: 0% -100%
CCT range: 1800K ~ 10000K
GM range: -100% ~ +100%

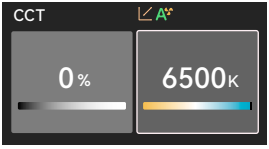

FX Mode

Press the MODE button to switch to FX mode, in which you can choose among the 11 effects and adjust their respective parameters.

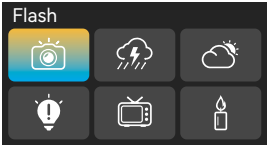

Effect	DIM	CCT	Speed	Others
Flash	0% -100%	2800K-6500K	1-100	Mode: Camera Flash/Flash Bulb Trigger: Auto/Manual
Lightning		2800K-6500K	×	Times: Random/1-10 Frequency: Random/2-20 Trigger: Auto/Manual
Cloudy		×	Random/1-100	Ratio: 30% -90%
Broken Bulb		2800K-6500K	1-100	×
TV		×	1-100	×
Candle		×	1-100	×
Fire		×	1-100	×
Firework		×	1-100	Ember: 1-100
Explosion		2800K-6500K	1-100	Ember: 1-100 Trigger: Auto/Manual
Welding		2800K-6500K	1-100	×
SOS		2800K-6500K	×	×

Note: Please rotate the select dial to adjust the parameters, then press the select dial and rotate the SET button to the next parameter. Select manual, the effect can be triggered once by pressing the select dial once. After a certain effect is set, press MODE button can return to the 11 effects interface.

MENU Settings

Press the MENU button to enter menu interface, rotate the select dial and press SET button to enter the following setting options, press the MENU button can return to the previous interface.

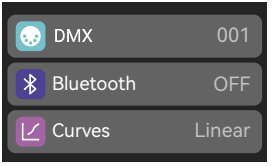

DMX

Press the SET button to enter DMX interface, press the select dial and rotate the SET button to adjust the following settings.

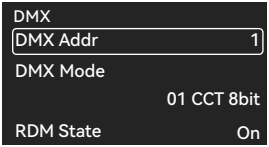

Level 1 Option	Level 2 Option	Description
DMX Address	001-512	Initial address
DMX Mode	01: CCT 8 Bit	CCT mode in 8bit
	02: FX 8 Bit	FX mode in 8bit
	03: CCT 16 Bit	CCT mode in 16bit
	04: FX 16 Bit	FX mode in 16bit
	05: ULTIMATE 8 Bit	ULTIMATE mode in 8bit
	06: ULTIMATE 16 Bit	ULTIMATE mode in 16bit
RDM State	On	Turn on RDM, the controller can set the fixture address and DMX mode
	Off	Turn off RDM
DMX Lost	Hold Last Command	After the DMX control signal is lost, continue to use the last received DMX control signal until power down or a valid DMX control signal is received again.
	Black Out	The light is off immediately.
	Black Out After 2 min	After the DMX control signal is lost, continue to use the last received DMX control signal for 2 minutes then black out. Note: If a valid DMX control signal is received within 2 minutes, then use the new DMX control signal.
Termination	On	Turn on DMX terminal
	Off	Turn off DMX terminal
Extend DMX Channels	On	Turn on extend DMX channels
	Off	Turn off extend DMX channels
QR Code	Scan to check the DMX mode specification	

Note: Please refer to the DMX mode specification to control the device by DMX/RDM. The electronic version can be downloaded from the official website https://www.godox.com.

Bluetooth

Press the SET button to enter Bluetooth interface, press the select dial and rotate the SET button to Bluetooth to turn it on or off. If you need to reset the Bluetooth, rotate the select dial to reset and press the SET button. The MAC code is on the corner for quick check.

"GODOX Light" app Downloading

Scan the QR code to download the "Godox Light" smartphone app (can be used in Android and iOS).

Note:
1. The app can be used directly on the firstly installed device (smartphone or iPad). When change to other mobile device (smartphone or iPad), the light shall be reset before the normal connection of the app.
2. The app should be version 3.0 or above.

Curves

Press the SET button to enter dimming curves interface, press the select dial and rotate the SET button to choose among linear, S-curve, exponential and logarithmic.

Anti-False Touch

Press the SET button to enter anti-false touch interface, press the select dial and rotate the SET button to select among off, on and bootup on plugging.

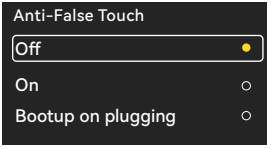

Off: Connect to power source, press and hold the power switch button to enter the main interface.
On: Connect to power source, press and hold the power switch button then rotate the select dial to enter the main interface.
Bootup on plugging: Connect to power source via the DC input port to enter the main interface.

Display

Press the SET button to enter display interface, rotate the select dial clockwise to increase the brightness, while rotate anticlockwise to decrease the brightness, with a range of 10%-100%.

Fan

Press the SET button to enter fan interface, press the select dial and rotate the SET button to choose among off, auto, medium and high.

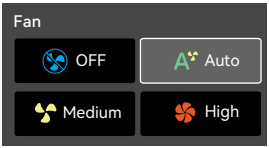

Language

Press the SET button to enter language interface, press the select dial and rotate the SET button to choose between simplified Chinese and English.

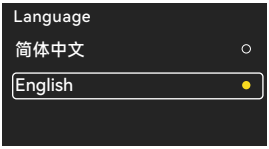

Upgrade

Press the SET button to enter upgrade interface, in which you can check the upgrade instructions.

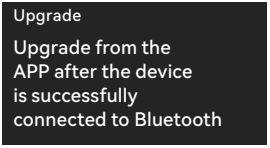

"GODOX Light" app Firmware Upgrade

Open Godox Light, enter a certain scene and click "+" to add a fixture, then click ⋮ to display more settings, choose firmware upgrade.

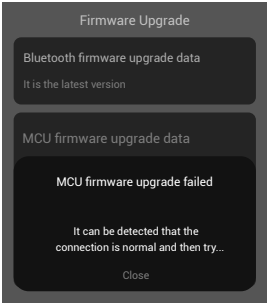

Factory Reset

Press the SET button to enter factory reset interface, press the select dial and rotate the SET button to choose yes or no. If you choose yes, the device will automatically reset and reboot, then simplified Chinese and English options show on the display for your choice, after which the brightness will turn to 50% automatically.

Fixture Info

Press the select dial to enter fixture info interface, in which you can check the basic information of the fixture.

Fixture Info

Model: ML150Bi
Version: V1.00
Temp: 27
UID: XXX

NFC Fixture Addition

1. Make sure the Bluetooth and NFC functions of smartphone and fixture are turned on, the 【Godox Light】 app is V3.2.4 or above.

2. Turn on the 【Godox Light】 app and enter the corresponding scene, click 【+】to select【NFC Addition】function, bring the NFC sensing area of smartphone near the sensing area of fixture to scan to add.

Illuminance Data

CCT	Testing Condition	Unit	1m	2m	3m
2800K	Bare Light	lux	3510	900	400
		fc	326	84	37
	With Zoom Lens Reflector ML-Z (Spot)	lux	37400	8800	3800
		fc	3470	818	353
	With Zoom Lens Reflector ML-Z (Flood)	lux	26300	7360	3330
		fc	2440	683	309
3200K	Bare Light	lux	3720	954	424
		fc	346	89	39
	With Zoom Lens Reflector ML-Z (Spot)	lux	39700	9340	4040
		fc	3690	867	375
	With Zoom Lens Reflector ML-Z (Flood)	lux	27900	7820	3530
		fc	2590	727	328
4300K	Bare Light	lux	3960	1020	451
		fc	368	94	42
	With Zoom Lens Reflector ML-Z (Spot)	lux	42400	9980	4330
		fc	3940	927	402
	With Zoom Lens Reflector ML-Z (Flood)	lux	29900	8360	3770
		fc	2770	777	350
5600K	Bare Light	lux	4360	1120	496
		fc	405	104	46
	With Zoom Lens Reflector ML-Z (Spot)	lux	46800	11100	4780
		fc	4350	1030	444
	With Zoom Lens Reflector ML-Z (Flood)	lux	32900	9220	4150
		fc	3060	857	386
6500K	Bare Light	lux	4540	1170	518
		fc	422	108	48
	With Zoom Lens Reflector ML-Z (Spot)	lux	48900	11500	5010
		fc	4540	1070	466
	With Zoom Lens Reflector ML-Z (Flood)	lux	34400	9620	4330
		fc	3190	894	403

Note: All the data are average values instead of absolute values. All the above tests are based on the condition of 100% brightness.

Technical Data

Model	ML150Bi
DC INPUT Port	36V⎓4.6A , 165W (Max.)
Brightness Range	0% ~ 100%
CCT Range	2800K~6500K
Dimming Curves	linear, S-curve, exponential, logarithmic
FX Modes	11
CRI	≈96
TLCI	≈96
Controlling Methods	Wired DMX/RDM, Bluetooth, light body control
Bluetooth Controlling Distance	30m
Working Environment Temperature	-10℃ ~ 40℃
Bare Light Dimension	≈3.58"*4.53"*3.58"
Bare Light Net Weight	≈770g

Specifications and data may subject to changes without notice.

FCC Statement

This device complies with part 15 of the FCC Rules. Operation is subject to the following two conditions:
(1) This device may not cause harmful interference, and
(2) this device must accept any interference received, including interference that may cause undesired operation.
Any Changes or modifications not expressly approved by the party responsible for compliance could void the user's authority to operate the equipment.
Note: This equipment has been tested and found to comply with the limits for a Class B digital device, pursuant to part 15 of the FCC Rules. These limits are designed to provide reasonable protection against harmful interference in a residential installation. This equipment generates uses and can radiate radio frequency energy and, if not installed and used in accordance with the instructions, may cause harmful interference to radio communications. However, there is no guarantee that interference will not occur in a particular installation. If this equipment does cause harmful interference to radio or television reception, which can be determined by turning the equipment off and on, the user is encouraged to try to correct the interference by one or more of the following measures:
-Reorient or relocate the receiving antenna.
-Increase the separation between the equipment and receiver.
-Connect the equipment into an outlet on a circuit different from that to which the receiver is connected.
-Consult the dealer or an experienced radio/TV technician for help.
The device has been evaluated to meet general RF exposure requirement.
The device can be used in portable exposure condition without restriction.

IC Warning

Le présent appareil est conforme aux CNR d'Industrie Canada applicables aux appareils radio exempts de licence. L'exploitation est autorisée aux deux conditions suivantes:

(1) l'appareil ne doit pas produire de brouillage, et

(2) l'utilisateur de l'appareil doit accepter tout brouillage radioélectrique subi, même si le brouillage est susceptible d'en compromettre le fonctionnement

Tout changement ou modification non expressément approuvé par la partie responsable de la réglementation de l'OCDE peut faire perdre à l'utilisateur le droit d'utiliser l'appareil.

Remarque: cet appareil a été testé pour répondre aux limites des appareils numériques de classe B conformément à la partie 15 des règles de la Federal Communications Commission des États - Unis. Ces limites sont conçues pour fournir une protection raisonnable contre les interférences nuisibles dans les installations résidentielles. L'appareil génère de l'énergie RF utilisée et rayonne, ce qui peut causer des interférences nocives pour les communications radio s'il n'est pas installé et utilisé conformément aux instructions. Cependant, aucun

Garantie contre les interférences dans une installation spécifique. Si l'appareil cause des interférences nuisibles à la réception de la radio ou de la télévision, qui peuvent être déterminées en éteignant et en allumant l'appareil, l'utilisateur est encouragé à tenter de corriger les interférences par une ou plusieurs des mesures suivantes:

- redirection ou repositionnement de l'antenne de réception.
- augmenter l'espacement entre l'appareil et le récepteur.
- Connecter l'appareil à une prise sur un circuit différent de celui auquel le récepteur est connecté.
- consultez votre revendeur ou un technicien radio / tv expérimenté pour obtenir de l'aide.

Avertissement RF pour les appareils portables:

L'appareil a été évalué pour répondre aux exigences générales d'exposition aux radiofréquences. Équipement Peut être utilisé sans restriction dans des conditions d'exposition portables.

Warning

Operating frequency: 2402MHz – 2480MHz（BT）
Maximum EIRP Power: 5dBm

Declaration of Conformity
GODOX Photo Equipment Co., Ltd. hereby declares that this equipment are in compliance with the essential requirements and other relevant provisions of Directive 2014/53/EU. In accordance with Article 10(2) and Article 10(10), this product is allowed to be used in all EU member states.For more information of DoC, Please click this web link:

https://www.godox.com/eu-declaration-of-conformity/

The device complies with RF specifications when the device used at 0mm from your body.

产品保修

尊敬的用户，本保修卡是申请保修服务的重要凭证，请您配合销售商填写并妥善保管，谢谢！

产品信息	型号	产品条码
用户信息	姓名	联系电话
	通信地址	
销售商信息	名称	
	联系电话	
	通信地址	
	销售日期	
备注		

注：此表应由销售商盖章确认。

产品信息

本文件适用于相关《产品保修信息》(见后面说明)所列产品，其他非属此范围的产品或部件(如促销品、赠品及其他出厂后附加的部件等)不在此保修承诺内。

保修期

产品及部件的相应保修期按相关的《产品保修信息》执行。保修期自产品首次购买日起算，购买日以购买产品时保修卡登记日期为准。

如何获得保修服务

您可直接与产品销售商或授权服务机构联系，也可拨打神牛产品售后服务电话，与我们联系，由我们的服务人员为您安排服务。申请保修时，您应提供有效的保修卡作为保修凭证，方可获得保修。如您不能提供有效的保修卡，则在我们确认产品或部件属于保修范围的情况下，也可以为您提供保修，但这不作为我们的义务。

不适用保修情况

如产品存在下列情况，本文件项下的保证和服务将不适用：①产品或部件超过相应保修期；②错误或不适当使用、维护或保管导致的故障或损坏，如：不当搬运；非按产品合理预期用途使用；不当插拨外接设备；跌落或外力挤压；接触或暴露于不适当温度、溶剂、酸碱、水浸或潮湿环境；③由非神牛授权机构或人员安装、修理、更改、添加或拆卸造成的故障或损坏；④产品或部件原有识别信息被修改变更或除去；⑤无有效保修卡；⑥使用非合法授权、非标准或非公开发行的软件造成的故障或损坏；⑦因不可抗力或意外事件造成的故障或损坏；⑧其他非因产品本身质量问题导致的故障或损坏。遇上述情况，您应向相关责任方寻求解决，神牛对此不承担任何责任。因非在保修期或保修范围内的部件、附件或软件导致产品不能正常使用的，不是保修范围内的故障。产品使用过程中正常的脱色，磨损和消耗，不是保修范围内的故障。

产品保修和服务支持信息

产品的保修期和服务类型按以下《产品保修信息》执行：

产品类别	选件名称	保修期（月）	保修服务类型
部件	电路板	12	客戶送修
其他	例如光效附件、各类线材、航空箱或其他包装	无	无保修

神牛产品售后服务电话　0755-29609320-8062

Warranty

Dear customers, as this warranty card is an important certificate to apply for our maintenance service, please fill in the following form in coordination with the seller and safe-keep it. Thank you!

Product Information	Model	Product Code Number
Customer Information	Name	Contact Number
	Address	
Seller Information	Name	
	Contact Number	
	Address	
	Date of Sale	
Note		

Note: This form shall be sealed by the seller.

Applicable Products

Applicable ProductsThe document applies to the products listed on the Product Maintenance Information (see below for further information). Other products or accessories (e.g. promotional items,giveaways and additional accessories attached,etc.) are not included in this warranty scope.

Warranty Period

The warranty period of products and accessories isimplemented according to the relevant Product Maintenance Information. The warranty period is calculated from the day(purchase date) when the product is bought for the first time,And the purchase date is considered as the date registered onthe warranty card when buying the product.

How to Get the Maintenance Service

If maintenance service is needed, you can directly contact the product distributor or authorized service institutions. You can also contact the Godox after-sale service call and we will offer you service. When applying for maintenance service, you should provide valid warranty card. If you cannot provide valid warranty card, we may offer you maintenance service once confirmed that the product or accessory is involved in the maintenance scope, but that shall not be considered as our obligation.

Inapplicable Cases

The guarantee and service offered by this document are not applicable in the following cases: ① **The product or accessory has expired its warranty period; ② Breakage or damage caused by inappropriate usage, maintenance or preservation, such as improper packing, improper usage, improper plugging in/out external equipment, falling off or squeezing by external force, contacting or exposing to the improper temperature, solvent, acid, base, flooding and damp environments, etc; ③ Breakage or damage caused by non-authorized institution or staff in the process of installation, maintenance, alternation, addition and detachment; ④ The original identifying information of product or accessory is modified, alternated, or removed; ⑤ No valid warranty card; ⑥ Breakage or damage caused by using illegally authorized, nonstandard or non-public released software; ⑦ Breakage or damage caused by force majeure or accident; ⑧ Breakage or damage that could not be attributed to the product itself.** Once met these situations above, you should seek solutions from the related responsible parties and Godox assumes no responsibility. The damage caused by parts, accessories and software that beyond the warranty period or scope is not included in our maintenance scope. The normal discoloration, abrasion and consumption are not the breakage within the maintenance scope.

Maintenance and Service Support Information

The warranty period and service types of products are implemented according to the following Product Maintenance Information:

Product Type	Name	Maintenance Period(month)	Warranty Service Type
Parts with electrical properties	Circuit board	12	Customer sends the product to designated site
Other Items	Optical accessories, cables, flight case or other packages, etc.	No	Without warranty

合格证
QC PASS

Wechat
Official Account
神牛微信公众号

深圳市神牛摄影器材有限公司

地址：深圳市宝安区福海街道塘尾社区耀川工业园厂房 2 栋
电话：0755-29609320（8062） 传真：0755-25723423 邮箱：godox@godox. com

GODOX Photo Equipment Co., Ltd.

Add.: Building 2, Yaochuan Industrial Zone, Tangwei Community, Fuhai Street, Bao'an District, Shenzhen 518103, China Tel: +86-755-29609320(8062) Fax: +86-755-25723423 E-mail: godox@godox.com

www.godox.com

Made in China | 705-ML15B0-03