Godox

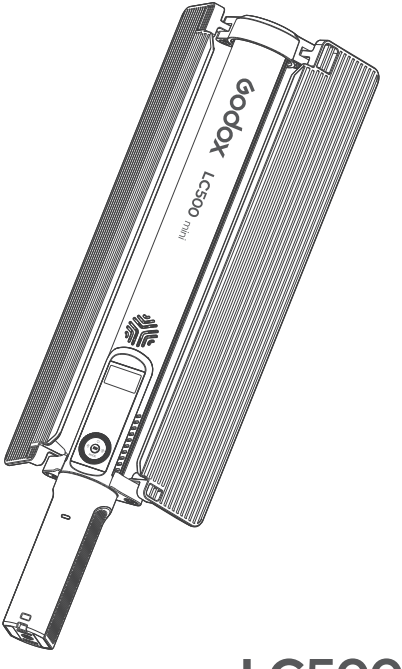

LC500 mini

LED 棒灯

LED Light Stick

使用手册

Instruction Manual

重要的安全说明及注意事项

首先作为最基本原则：本产品为专业灯光布景设备，应由专业灯光师使用或在专业人士指导下使用。使用时必须始终遵循基本的安全预防措施，具体安全预防措施如下：

1. 使用前必须阅读并理解产品说明书。
2. 专业灯具，禁止儿童使用。当儿童靠近时，家长或陪护人必须密切监督，以免儿童因碰撞灯具或私用灯具造成人身伤害。
3. 本灯具并非普通照明灯具，不可用于普通照明，任何有过眼部损伤或眼部敏感的人群均应避免使用本灯具。
4. 灯具点亮时，必须小心使用，禁止接触高温部件，如LED灯珠，以免造成灼伤。
5. 灯具点亮时，任何情况下均禁止直视灯珠。应该在专业灯光师指导下使用强光，任何情况下避免长时间处于强光环境，如引起眼睛不适，请及时关闭灯具，暂停使用，请及时就医。
6. 倘灯珠损坏或因热变形，应停止使用，并及时联系制造商、服务代理商或合格的维修人员更换灯珠，以免发生意外。
7. 本产品仅适用于-10℃ - 40℃工作环境温度及正常湿度环境下使用。
8. 请勿使用损坏的设备或设备配件，待专业维修人员检查维修，确认设备正常方可使用。
9. 在使用过程中，如果本产品由于跌落、受到挤压或遭受强烈冲击而造成外壳破裂的，请勿继续使用，以免因接触到内部电子元件而受到电击伤害。
10. 如需要延长线，请使用额定电流≥该设备额定电流的延长线。如延长线额定电流小于该设备，可能导致过热。
11. 部分产品电源线较长，请合理放置电源线，使其处于安全位置。避免电源线接触过热物体表面、避免放置不当导致拉扯损坏或绊倒现场人员。请使用本厂原装电源线，如使用非本厂电源线导致产品损坏，概不在本厂维修范围内。
12. 在清洁和维修之前，请务必从电源插座上拔下该设备插头。不使用时，禁止拉扯电源线以将设备插头从电源插座中拔出。正常断电，应是用手抓住该设备插头两端，将插头从电源插座中拔出。此设备需连接到接地插座中。
13. 本设备没有防水性能，请让设备保持干燥，请勿将本设备浸入水中或其他液体中。设备需安装在干燥且通风处，避免在雨天、潮湿、多尘或过热环境下使用。请勿将任何物体置于灯具上或使液体流入灯具内部，以免发生意外。
14. 请勿私自拆卸产品，如产品出现故障，须由本公司或授权的维修人员进行检查维修。
15. 存放本设备之前，请确保设备已完全冷却。存放时，将电源线从设备上拔出。设备应放置于设备便携包内或通风干燥处。
16. 请勿将设备放置在酒精、汽油等易燃易挥发的溶剂附近。
17. 本厂不推荐的产品附件，请勿使用，以免导致火灾、触电或人身伤害。
18. 清洁本设备时，请勿用湿布擦拭，请用干布，软布擦拭设备污垢。
19. 设备使用前，请注意将保护罩取下。
20. 本产品已通过ROHS，CE和FCC认证，请参考相关国家标准使用和操作。
21. 安全说明依据本厂严格测试制定，设备设计和规格如有变更，恕不另行通知。客户可以上神牛官网查看最新的电子版说明，了解产品最新资讯。
22. 部分产品内置锂电池。此类产品请使用专用的充电器进行充电，并且按正确的操作说明，在规定的电压、温度范围内使用。
23. 部分产品使用电池供电。此类产品请勿使用说明书中未指定的任何电池、电源或附件。请将电池和其他附件置于儿童及婴幼儿无法触及之处。如果儿童或婴幼儿吞下电池或附件，请立刻就医。如果电池漏液、变色、变形、冒烟或发出异味，请立刻将其取出。在取出过程中请小心，以免烫伤。如果继续使用，可能会引起火灾、触电或皮肤烫伤。请勿使用任何变形或改造过的电池。请勿拆卸或改造本产品或电池。请勿加热电池或焊接电池。请勿让电池与火或水接触。请勿让电池受到强烈的外力撞击。请勿将电池的正负端错误插入，或将新旧电池或不同类型的电池混合使用。
24. 一年保修期，消耗品电池、适配器、电源线等配件不在此保修范围内。
25. 经发现，擅自检修设备，将取消一年保修期，维修需要收取相关费用。
26. 对于不规范操作引起的机器故障不在保修范围内。

保存这些说明

本设备包含型号核准代码为: CMIIT ID:2023DP19846,为该产品的无线电发射模块。

前言

感谢您购买神牛产品。

神牛全新推出轻型 LED 棒灯 LC500 mini，输出功率约为 20W。棒灯顶部和电池手柄底部均设有 1/4" 螺丝口。LC500 mini 支持"Godox light"app 无线控制；内置锂电池，拍摄移动性强；具备两种模式：双色温模式和 FX 场景光效模式，常适用于人像拍摄、自拍补光、直播补光、创意拍摄、视频录制等场景。

警告

- ⚠ 请保持干燥：请勿用湿手接触产品，亦不可将产品浸入水中或暴露于雨中。
- ⚠ 请勿私自拆卸产品，如产品出现故障须由本公司或授权的维修人员进行检查维修。
- ⚠ 请勿让儿童接触本产品。
- ⚠ 本产品不能防水，在雨天及潮湿环境下请注意防水。
- ⚠ 请勿放置在超过 40 摄氏度的高温环境中。
- ⚠ 请勿在化学品、可燃性气体或其他特殊物质附近使用 LED 灯。在这些场合下，请注意相关警告标识。

部件名称

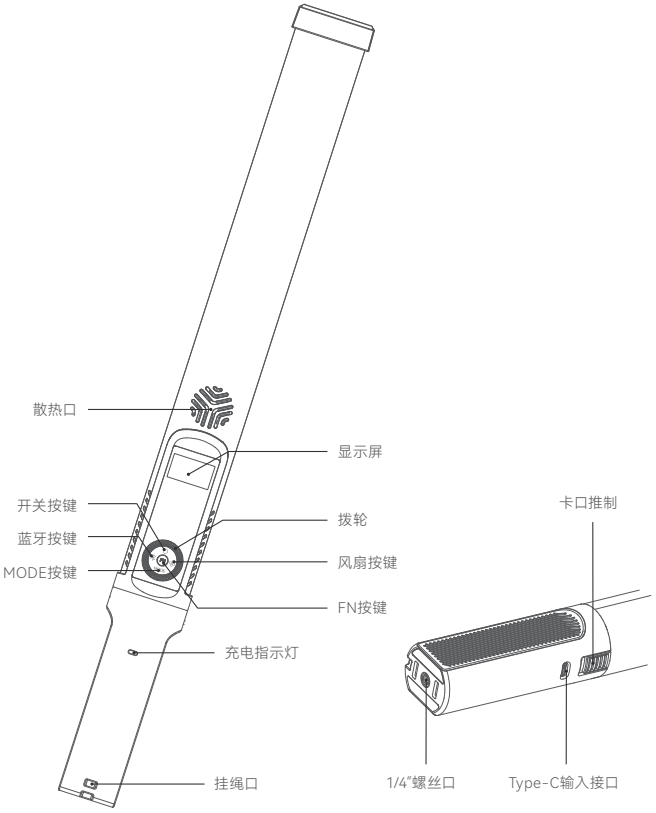

物料清单

温馨提示：说明书线图均为示意图，仅供参考。由于产品不断更新与升级，产品实物与线图可能存在差异，请以实物为准。

另购附件

电池手柄 BG01

安装挡光板

闭合挡光板后，将棒灯顶部插入挡光板夹槽，此时底部可顺势卡进挡光板夹环。

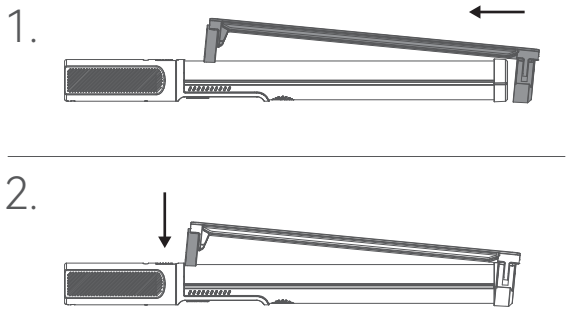

拆卸挡光板

闭合挡光板后，将棒灯底部从夹环中拉出，另一只手将遮光板抽出即可。

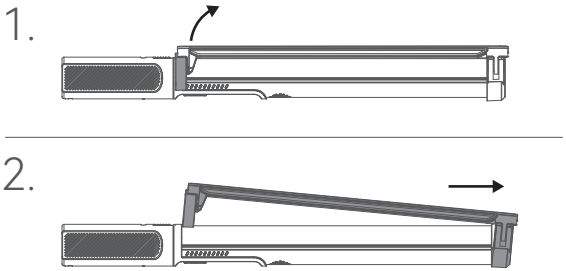

安装电池手柄BG01

用右手往下推动卡口推制的同时，左手将棒灯底部卡入手柄卡口后顺时针旋转即可安装完毕。

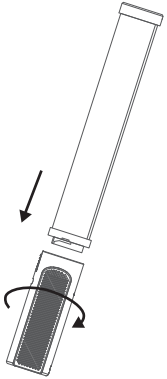

拆卸电池手柄BG01

用右手往下推动卡口推制的同时，左手将棒灯逆时针旋转即可拆卸完毕。

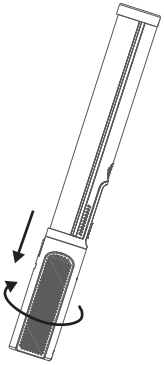

双色温模式

短按 MODE 按键切换至 CCT(双色温模式)。

短按 FN 按键可选色温 / 亮度，选中某项后，旋转拨轮可调节色温范围或亮度范围，左旋一次减少 100K 色温 /1%亮度，右旋一次增加 100K 色温 /1%亮度，色温范围：2500K-8500K，亮度范围：0%-100%。

FX 光效模式

短按 MODE 按键切换至 FX(光效模式)。

短按 FN 按键可选光效 / 亮度 / 光效参数，选中某项后，旋转拨轮可调光效 / 亮度 / 光效参数。

序号	光效图标	光效类型	光效设置选项	调节范围
1		闪光灯	SPD(速度)	1-100
2		雷闪电	FREQ(频率)	RANDOM(随机)/2-20
3		多云	SPD(速度)	RANDOM(随机)/1-100
4		坏灯泡	SPD(速度)	1-100
5	TV	电视机	SPD(速度)	1-100
6		蜡烛	SPD(速度)	1-100
7		火	SPD(速度)	1-100
8		烟花	SPD(速度)	1-100
9		爆炸	SPD(速度)	1-100
10		焊接	SPD(速度)	1-100
11	SOS	求救光效	CCT(色温)	2500K-8500K

开启 / 关闭风扇

当灯体过热时，短按风扇按键实现开启风扇或关闭风扇，开启风扇时，显示屏上方不会出现风扇图标。关闭风扇时，显示屏上方出现风扇关闭图标。

注：关闭风扇时，亮度调节范围：0%-50%。

蓝牙设置

短按蓝牙按键进入蓝牙设置界面，旋转拨轮可选 OFF(蓝牙关闭) /MAC 码 /RESET(蓝牙重置)。

选中“RESET”后，短按 FN 按键进行蓝牙重置，重置完毕自动返回蓝牙界面。

“Godox Light”App

扫描二维码即可下载“Godox Light”手机 App(安卓和苹果系统都可以使用)。

注：首个移动设备(手机或平板电脑)可直接使用 APP 操控灯体。更换其他移动设备时，灯体需进行蓝牙重置方可正常使用 APP。APP 需升级至 V3.0 以上版本。

照度数据

色温	照度	0.5m	1m	2m
2500K	lux	≈4200	≈1160	≈301
	fc	≈390	≈108	≈28
3200K	lux	≈4570	≈1260	≈326
	fc	≈424	≈117	≈30
4300K	lux	≈4780	≈1320	≈340
	fc	≈444	≈123	≈32
5600K	lux	≈5020	≈1390	≈357
	fc	≈467	≈129	≈33
6500K	lux	≈4960	≈1360	≈351
	fc	≈461	≈126	≈33
8500K	lux	≈4660	≈1270	≈328
	fc	≈433	≈118	≈30

以上数据均为平均值，非绝对值，测试皆在灯体 100%亮度下进行。

规格参数

型号	LC500 mini
内置锂电池	7.2V 3250mAh 23.4Wh
续航时间（灯体100%亮度,5600K）	续航最长≈75分钟
Type-C口输入	5V⎓1A 9V⎓1A 12V⎓1A
充电时间	≈1小时50分钟（12V⎓2A）
输入功率	最大≈20W
色温范围	2500-8500K
调光范围	0%-100%
FX光效	11类
CRI	平均≥95
TLCI	平均≥96
控制方式	蓝牙控制/灯体控制
蓝牙控制距离	最远30m
工作环境温度	-10℃~+40℃
尺寸（含手柄）	43mm*44mm*457mm
净重≈	548g

设计和规格如有变更，恕不另行通知。

Safety Instructions and Attentions

First of all, as the most basic principle: This product is a professional lighting set equipment and should be used by professional lighting engineers or under the guidance of professionals. Basic safety attentions must always be followed during use, as follows:

1. Before use, please read and understand these instructions and attentions.
2. Professional lighting is prohibited for children. When children are near, parents or accompanying persons must supervise closely to prevent children from personal injury due to collision with lamps or private use of lamps.
3. This lighting product is not ordinary lighting product and cannot be used for general lighting. Anyone who has suffered eye damage or has sensitive eyes should avoid using this product.
4. When the lamp is on, it must be used with care. Do not touch high-temperature parts, such as LED lamp beads, to avoid burns.
5. When the lamp is on, it is forbidden to look directly at the lamp beads under any circumstances. Strong light should be used under the guidance of professional lighting engineers. Avoid prolonged exposure to strong light under any circumstances. If eye discomfort, please turn off the lamp in time, suspend use, and see a doctor immediately.
6. If the lamp bead is damaged or deformed by heat, stop using this equipment, and contact the manufacturer, service agent or qualified maintenance personnel to replace the lamp bead in time to avoid accidents.
7. This product is only suitable for use in -10℃ to 40℃ operating environment and normal humidity environment.
8. Do not use damaged equipment or accessories, and wait for professional maintenance personnel to check and repair to confirm being normal before use.
9. During using, if the casing of this product is broken due to being dropped, squeezed or subjected to strong impact, please do not use it, so as to avoid electric shock injury due to contact with internal electronic components.
10. If an extension cord is required, please use an extension cord with a current rating greater than or equal to that of the equipment. If an extension cord is rated less than the equipment, overheating may result.
11. Some products have long power cords, please place the power cords properly and keep them in a safe place. Avoid contacting the power cord with overheating surfaces, avoid improper placement that could cause pulling damage, or trip on-site personnel. Please use the certified power cord from the original manufacturer. If the product is damaged by using a non-certified power cord, it will not be repaired by our factory.
12. Be sure to unplug equipment from the power outlet before cleaning and repairing. When not in use, do not pull the power cord to unplug the equipment. For normal power-off, please hold both ends of the plug of the equipment with your hands and pull the plug out of power outlet. This equipment needs to be connected to a grounded outlet.
13. This equipment is not waterproof, please keep it dry and do not immerse it in water or other liquids. The equipment should be installed in a dry and ventilated place, and avoid using it in rainy, humid, dusty or overheated environments. Do not place any objects on the lamp or let liquid flow into the lamp to avoid accidents.
14. Do not disassemble the product without permission. If the product fails, it must be checked and repaired by authorized maintenance personnel.
15. Before storing, make sure that the equipment has cooled down completely. For storage,

unplug the power cord from the equipment. The equipment should be placed in the carrying case or in a ventilated dry place.

16. Do not place equipment near flammable and volatile solvents such as alcohol and gasoline.
17. Do not use accessories that are not recommended by our factory to avoid fire, electric shock or personal injury.
18. When cleaning, do not wipe it with a damp cloth, please use a dry cloth or a soft cloth to wipe the dirt of the equipment.
19. Please take off the protective cover before using.
20. This product complies with ROHS, CE, and FCC certification, please refer to the relevant national standards for use and operation.
21. The safety instructions are formulated according to the strict testing of the factory, and the design and specifications of the equipment are subject to change without prior notice. For latest product information, please check the GODOX website and view latest electronic instruction.
22. Some products have built-in lithium batteries. Please use specified chargers, and use them within a proper range of the specified voltage and temperature according to the correct operating instructions.
23. Some products are battery powered. Do not use any batteries, power sources or accessories not specified in the instructions for such products. Keep batteries and other accessories out of the reach of children and infants. In the instance that a child or infant swallows a battery or accessory, immediate emergency medical attention is required. If the battery leaks, becomes discolored, deformed, emits smoke, or emits an abnormal odor, remove it immediately. Be careful during removal to avoid burns. Continued use could result in fire, electric shock, or burns. Do not use any deformed or modified batteries. Do not disassemble or modify this product or battery. Do not heat or solder the battery. Keep the battery away from fire or water. Do not incorrectly insert the positive and negative ends of batteries, or mix old and new batteries or batteries of different types together.
24. One-year warranty period, accessories such as consumable batteries, adapters, power cords, etc. are not covered by this warranty.
25. If it is found that the equipment is repaired without authorization, the one-year warranty period will be cancelled and relevant fees will be charged for maintenance.
26. Machine failures caused by non-standard operation are not covered by the warranty.

keep these instructions!

Foreword

Thank you for purchasing!

Introducing the all-new LC500 mini LED Light Stick from Godox, boasting a lightweight design and an approximate output power of 20W. The top of the light stick and the bottom of the grip handle are both equipped with 1/4" screw holes. The LC500 mini is compatible with the "Godox light" app for wireless control and has a built-in lithium battery for enhanced mobility. It offers two modes: a dual color temperature mode and an FX mode. The versatility of the LC500 mini makes it ideal for portrait photography, selfie lighting, live streaming, creative shooting, video recording, and other scenarios.

Warning

- ⚠ Always keep this product dry. Do not handle the product with wet hands, and do not immerse the product in water or expose it to rain.
- ⚠ Do not disassemble. Should repairs become necessary, this product must be sent to an authorized maintenance center.
- ⚠ Keep out of reach of children.
- ⚠ As this product is not waterproof, do not use in rain or in damp conditions.
- ⚠ Do not leave or store the product if the ambient temperature reads over 40℃.
- ⚠ Do not use the product in the presence of chemicals, flammable gas or other special substances. In certain circumstances, please pay attention to the relevant warnings.

Name of Parts

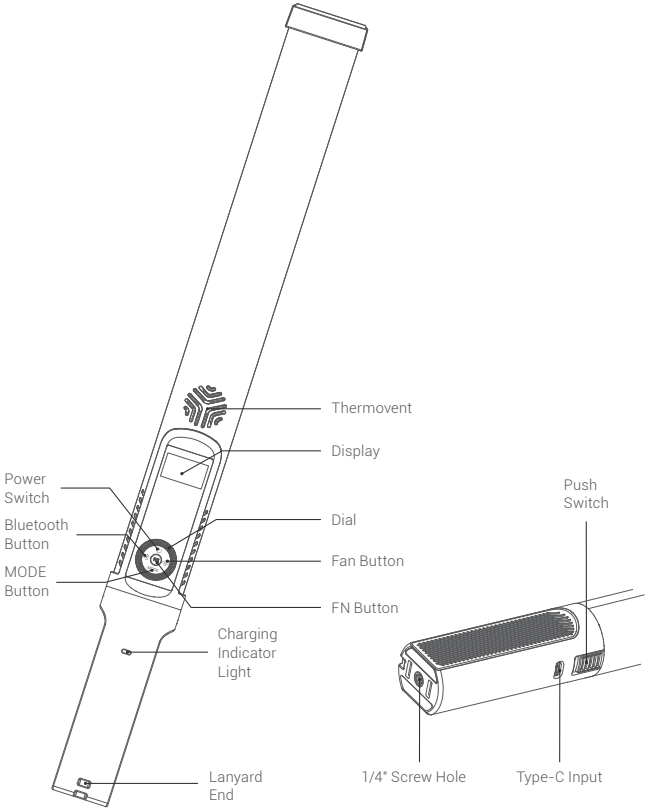

What's Inside

Light Body ×1

Barndoor ×1

Battery Grip BG01 ×1

USB-C Cable ×1

Instruction Manual ×1

Carry Bag ×1

Note: Due to continuous updates and upgrades of the products, there may be differences between the actual products and the pictures. Therefore, the pictures are for reference only, products to prevail in kind.

Optional Accessories

Battery Grip BG01

Installation of the Barndoor

After closing the barndoor, insert the top of the light stick into the slot of the barndoor. Then, the bottom of the stick light can be smoothly secured into the clamp of the barndoor.

1.

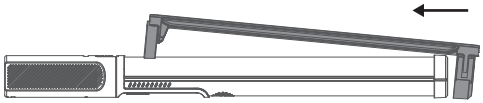

2.

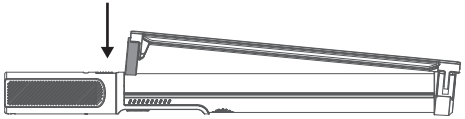

Disassembly of Barndoor

After closing the barndoor, pull the bottom of the light stick out of the clamp with one hand, and remove the barndoor with the other hand.

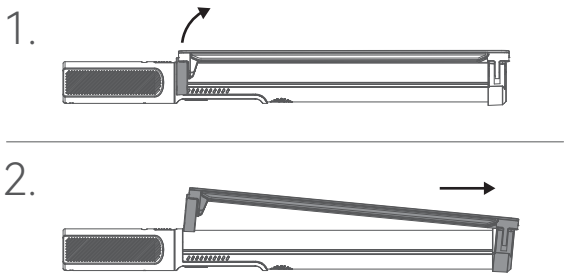

Installing Battery Grip BG01

Using your right hand, push down the pusher while simultaneously aligning the bottom of the light stick with the grip's mount. Rotate the light stick clockwise to secure it in place.

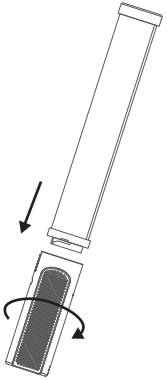

Removing Battery Grip BG01

Using your right hand, push down the pusher while simultaneously rotating the light stick counterclockwise. The light stick will detach from the grip.

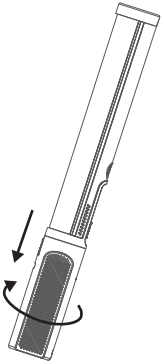

Dual Color Temperature Mode

Short press the MODE button to switch to CCT (Dual color temperature mode).

Short pressing the FN Button allows you to select color temperature/brightness. After selecting an option, turn the dial to adjust the color temperature or brightness range. Turn the dial counterclockwise to decrease the color temperature/brightness by 100K/1%, and turn it clockwise to increase the color temperature/brightness by 100K/1%. The color temperature range is 2500K-8500K, and the brightness range is 0%-100%.

FX Mode

Short press the MODE Button to switch to FX mode.

Short pressing the FN Button allows you to select lighting effect/brightness/lighting effect parameters. To be specific, after selecting an option, rotate the dial to adjust the lighting effect/brightness/lighting effect parameters.

NO.	FX Icon	FX Type	FX Settings	Adjustable Range
1		FLASH	SPD	1-100
2		LIGHTNING	FREQ	RANDOM/2-20
3		CLOUDY	SPD	RANDOM/1-100
4		BROKEN BULB	SPD	1-100
5	TV	TELEVISION	SPD	1-100
6		CANDLE	SPD	1-100
7		FIRE	SPD	1-100
8		FIREWORKS	SPD	1-100
9		EXPLOSION	SPD	1-100
10		WELDING	SPD	1-100
11	SOS	SOS	CCT	2500K-8500K

Turning the Fan On/Off

If the light becomes overheated during operation, short press the Fan Button to turn the fan on or off, When the fan is turned on, there will be no fan icon displayed above the screen. When the fan is turned off, the fan off icon will be displayed above the screen.

Note: When the fan is off, the brightness adjustment range is from 0% to 50%.

Bluetooth Setting

Short press the Bluetooth Button to enter the Bluetooth setting interface. Rotate the dial to select OFF (Bluetooth off)/MAC code/RESET (Bluetooth reset).

After selecting 'RESET', short press the FN Button to reset the Bluetooth. After the reset is complete, it will automatically return to the Bluetooth interface.

“Godox Light”App

Scan the QR code to download “Godox Light” app (both Android and iOS systems are available).

Note: The app can be used directly on the firstly installed device (smartphone or tablet). When changing to other mobile device, the light shall be reset before the normal usage of the app. The app should be V3.0 or above.

Photometric Data

CCT	Unit	0.5m	1m	2m
2500K	lux	≈4200	≈1160	≈301
	fc	≈390	≈108	≈28
3200K	lux	≈4570	≈1260	≈326
	fc	≈424	≈117	≈30
4300K	lux	≈4780	≈1320	≈340
	fc	≈444	≈123	≈32
5600K	lux	≈5020	≈1390	≈357
	fc	≈467	≈129	≈33
6500K	lux	≈4960	≈1360	≈351
	fc	≈461	≈126	≈33
8500K	lux	≈4660	≈1270	≈328
	fc	≈433	≈118	≈30

Note: The above data are average values instead of absolute values. All the above tests are based on the condition of 100% brightness.

Technical Data

Model	LC500 mini
Lithium Battery	7.2V 3250mAh 23.4Wh
Battery Life (At 100% Brightness,5600K)	Longest battery life ≈ 75 min
Type-C Input	5V⎓1A 9V⎓1A 12V⎓1A
Charging time	≈1 hour 50 minutes (12V⎓2A)
Input Power	Max. ≈20W
CCT	2500-8500K
Brightness Range	0%-100%
FX Type	11
CRI	Average≥95
TLCI	Average≥96
Control Method	Bluetooth Control/Light Body Control
Bluetooth Control Distance	Max. 30m
Working Environment Temperature	-10℃~40℃
Dimension (Including Grip Handle)	1.69"*1.73"*18"
Net Weight ≈	548g

Specifications and data may subject to changes without notice.

FCC Statement

This device complies with part 15 of the FCC Rules. Operation is subject to the following two conditions:

(1) This device may not cause harmful interference, and

(2) this device must accept any interference received, including interference that may cause undesired operation.

Any Changes or modifications not expressly approved by the party responsible for compliance could void the user's authority to operate the equipment.

Note: This equipment has been tested and found to comply with the limits for a Class B digital device, pursuant to part 15 of the FCC Rules. These limits are designed to provide reasonable protection against harmful interference in a residential installation. This equipment generates uses and can radiate radio frequency energy and, if not installed and used in accordance with the instructions, may cause harmful interference to radio communications. However, there is no guarantee that interference will not occur in a particular installation. If this equipment does cause harmful interference to radio or television reception, which can be determined by turning the equipment off and on, the user is encouraged to try to correct the interference by one or more of

the following measures:

-Reorient or relocate the receiving antenna.

-Increase the separation between the equipment and receiver.

-Connect the equipment into an outlet on a circuit different from that to which the receiver is connected.

-Consult the dealer or an experienced radio/TV technician for help.

The device has been evaluated to meet general RF exposure requirement.

The device can be used in portable exposure condition without restriction.

Warning

Operating frequency:2402MHz – 2480MHz(BT)

Maximum EIRP Power: 0.65dBm

Declaration of Conformity

GODOX Photo Equipment Co.,Ltd. hereby declares that this equipment are in compliance with the essential requirements and other relevant provisions of Directive 2014/53/EU. In accordance with Article 10(2) and Article 10(10), this product is allowed to be used in all EU member states.For more information of DoC, Please click this web link:

https://www.godox.com/eu-declaration-of-conformity/

The device complies with RF specifications when the device used at 0mm from your body.

产品保修

尊敬的用户，本保修卡是申请保修服务的重要凭证，请您配合销售商填写并妥善保管，谢谢！

产品信息	型号	产品条码
用户信息	姓名	联系电话
	通信地址	
销售商信息	名称	
	联系电话	
	通信地址	
	销售日期	
备注		

注：此表应由销售商盖章确认。

产品信息

本文件适用于相关《产品保修信息》(见后面说明)所列产品，其他非属此范围的产品或部件(如促销品、赠品及其他出厂后附加的部件等)不在此保修承诺内。

保修期

产品及部件的相应保修期按相关的《产品保修信息》执行。保修期自产品首次购买日起算，购买日以购买产品时保修卡登记日期为准。

如何获得保修服务

您可直接与产品销售商或授权服务机构联系，也可拨打神牛产品售后服务电话，与我们联系，由我们的服务人员为您安排服务。申请保修时，您应提供有效的保修卡作为保修凭证，方可获得保修。如您不能提供有效的保修卡，则在我们确认产品或部件属于保修范围的情况下，也可以为您提供保修，但这不作为我们的义务。

不适用保修的情况

如产品存在下列情况，本文件项下的保证和服务将不适用：**①产品或部件超过相应保修期；②错误或不适当使用、维护或 保管导致的故障或损坏，如：不当搬运；非按产品合理预期用途使用；不当插拔外接设备；跌落或外力挤压；接触或暴露于不适当温度、溶剂、酸碱、水浸或潮湿环境；③由非神牛授权机构或人员安装、修理、更改、添加或拆卸造成的故障或损坏；④产品或部件原有识别信息被修改变更或除去；⑤无有效保修卡；⑥使用非合法授权、非标准或非公开发行的软件造成的故障或损坏；⑦因不可抗力或意外事件造成的故障或损坏；⑧其他非因产品本身质量问题导致的故障或损坏。**遇上述情况，您应向相关责任方寻求解决，神牛对此不承担任何责任。因非在保修期或保修范围内的部件、附件或软件导致产品不能正常使用的，不是保修范围内的故障。产品使用过程中正常的脱色，磨损和消耗，不是保修范围内的故障。

产品保修和服务支持信息

产品的保修期和服务类型按以下《产品保修信息》执行：

产品类别	选件名称	保修期(月)	保修服务类型
部件	主机	12	客户送修
	电池	3	客户送修
	充电器等带电性能的部件。	12	客户送修
其他	如外壳、保护罩、锁紧装置、包装等。	无	无保修

神牛产品售后服务电话　0755-29609320-8062

Warranty

Dear customers, as this warranty card is an important certificate to apply for our maintenance service, please fill in the following form in coordination with the seller and safe-keep it. Thank you!

Product Information	Model	Product Code Number
Customer Information	Name	Contact Number
	Address	
Seller Information	Name	
	Contact Number	
	Address	
	Date of Sale	
Note		

Note: This form shall be sealed by the seller.

Applicable Products

The document applies to the products listed on the Product Maintenance Information (see below for further information). Other products or accessories (e.g. promotional items,giveaways and additional accessories attached,etc.) are not included in this warranty scope.

Warranty Period

The warranty period of products and accessories isimplemented according to the relevant Product Maintenance Information. The warranty period is calculated from the day(purchase date) when the product is bought for the first time,And the purchase date is considered as the date registered onthe warranty card when buying the product.

How to Get the Maintenance Service

If maintenance service is needed, you can directly contact the product distributor or authorized service institutions. You can also contact the Godox after-sale service call and we will offer you service. When applying for maintenance service, you should provide valid warranty card. If you cannot provide valid warranty card, we may offer you maintenance service once confirmed that the product or accessory is involved in the maintenance scope, but that shall not be considered as our obligation.

Inapplicable Cases

The guarantee and service offered by this document are not applicable in the following cases: **① The product or accessory has expired its warranty period; ② Breakage or damage caused by inappropriate usage, maintenance or preservation, such as improper packing, improper usage, improper plugging in/out external equipment, falling off or squeezing by external force, contacting or exposing to the improper temperature, solvent, acid, base, flooding and damp environments, etc; ③ Breakage or damage caused by non-authorized institution or staff in the process of installation, maintenance, alternation, addition and detachment; ④ The original identifying information of product or accessory is modified, alternated, or removed; ⑤ No valid warranty card; ⑥ Breakage or damage caused by using illegally authorized, nonstandard or non-public released software; ⑦ Breakage or damage caused by force majeure or accident; ⑧ Breakage or damage that could not be attributed to the product itself.** Once met these situations above, you should seek solutions from the related responsible parties and Godox assumes no responsibility. The damage caused by parts, accessories and software that beyond the warranty period or scope is not included in our maintenance scope. The normal discoloration, abrasion and consumption are not the breakage within the maintenance scope.

Maintenance and Service Support Information

The warranty period and service types of products are implemented according to the following Product Maintenance Information:

Product Type	Name	Maintenance Period(month)	Warranty Service Type
Parts	Circuit Board	12	Customer sends the product to designated site
	Battery	3	Customer sends the product to designated site
	Electrical parts e.g.battery charger, etc.	12	Customer sends the product to designated site
Other Items	Lamp body, lamp cover, locking device, package, etc.	No	Without warranty

合格证
QC PASS

Wechat
Official Account
神牛微信公众号

深圳市神牛摄影器材有限公司

地址: 深圳市宝安区福海街道塘尾社区耀川工业区厂房2栋
电话: 0755-29609320(8062)　传真: 0755-25723423　邮箱: godox@godox.com

GODOX Photo Equipment Co.,Ltd.

Add.: Building 2, Yaochuan Industrial Zone, Tangwei Community, Fuhai Street, Bao'an District, Shenzhen 518103, China　Tel: +86-755-29609320(8062)　Fax: +86-755-25723423　E-mail: godox@godox.com

www.godox.com

Made in China I 705-LC500M-07